Application Drawing

EVAX 25, EVAX 50 or EVAX 100 with Back-Up Amplifier Single Cabinet Application

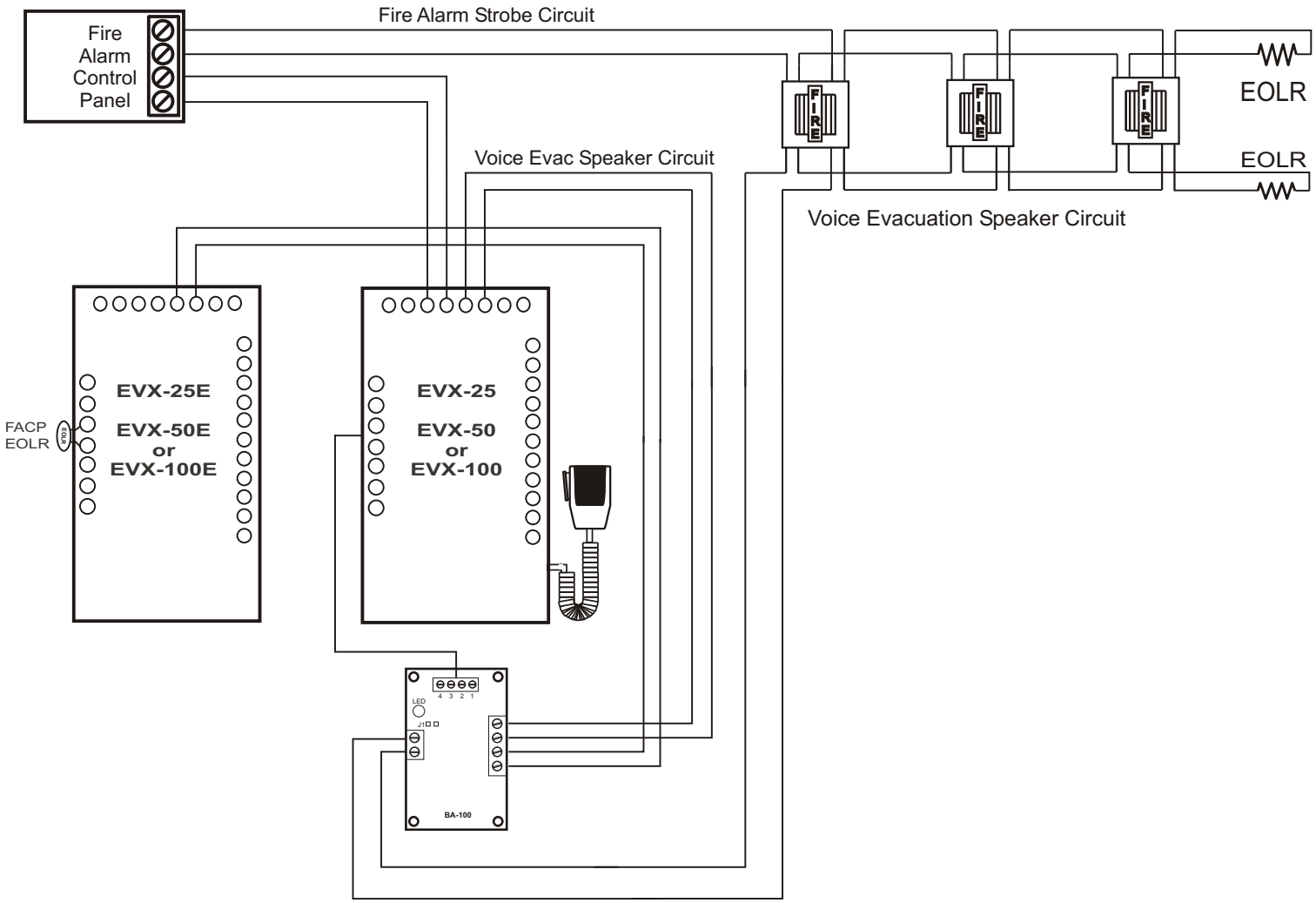

EVAX SYSTEMS
SOUND SOLUTIONS

33 Chestnut St. New Haven, CT 06511
(203) 752-1806 FAX 752-1906