Application Drawing

EVAX 25/8Z, EVAX 50/8Z or EVAX 100/8Z Single Cabinet Application

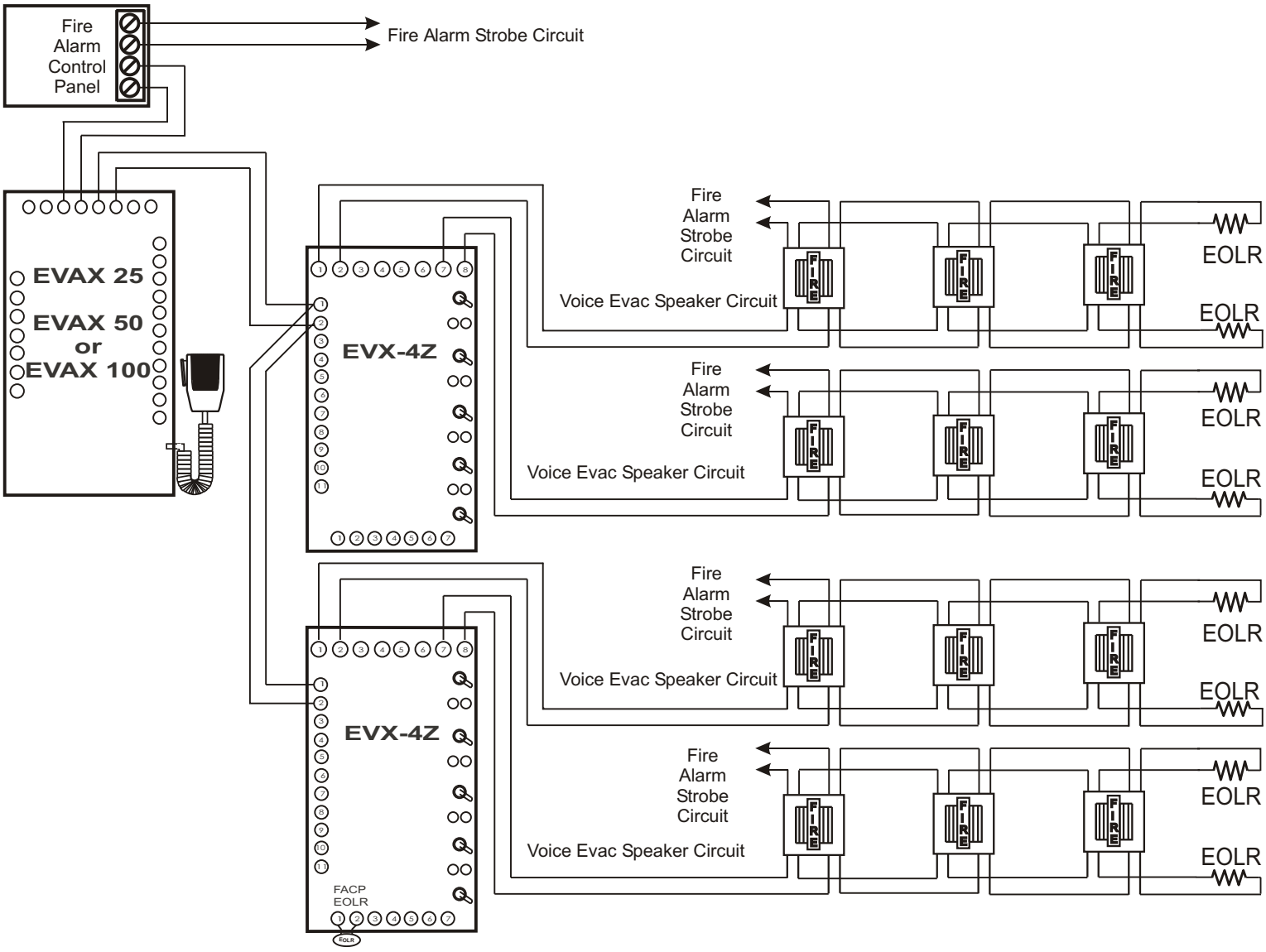

EVAX SYSTEMS
SOUND SOLUTIONS

33 Chestnut St. New Haven, CT 06511
(203) 752-1806 FAX 752-1906